SIEMENS

7804



SQN70.../SQN71... SQN74.../SQN75...

Actuators SQN7...

Reversible electromotoric actuators for air dampers and valves of oil or gas burners of small to medium capacity.

The SQN7... and this Data Sheet are intended for use by OEMs which integrate the actuators in their products!

Use and features

The SQN7... actuators are designed for driving gas or air dampers of oil or gas burners of small to medium capacity, for load-dependent control of the fuel and combustion air volume:

- In connection with P-PI or PID controllers, such as the RWF40...
- Directly via the different types of burner controls, such as LFL..., LME..., LMG..., LMO..., LOA...
- In connection with 1- or 2-wire control or 3-position controllers

• All types of actuators feature:	-	Impact-proof and heat-resistant plastic housings	
	-	Screw terminals for the electrical connections	
	-	Maintenance-free gear train, which can be disengaged	
	-	Internal position indication	
	-	Easy-to-adjust end and auxiliary switches for adjusting the switching points	
	-	Integrated electronic circuits	
• Holding torque:	-	SQN70.../SQN71.../SQN75...	0.7...1.3 Nm
	-	SQN74...	0.7 Nm
• Running time:	-	SQN70.../SQN71.../SQN75...	4...30 s
	-	SQN74...	4 s
• Direction of rotation:	-	SQN70.../SQN74...	counterclockwise
	-	SQN71.../SQN75...	clockwise
• SQN74.../SQN75...	-	Fixing holes and cable entries	
	-	Equivalent to actuators of the same category made by Conectron and Berger	

Warning notes

To avoid injury to persons, damage to property or the environment, the following warning notes must be observed!

Do not interfere with or modify the actuators!

- All activities (mounting, installation and service work, etc.) must be performed by qualified staff
- Before making any wiring changes in the connection area, completely isolate the plant from mains supply (all-polar disconnection). Ensure that the plant cannot be inadvertently switched on again and that it is indeed dead. If not observed, there is a risk of electric shock hazard
- Ensure protection against electric shock hazard by providing adequate protection for the connection terminals and by securing the housing cover
- Each time work has been carried out (mounting, installation, service work, etc.), check to ensure that wiring is in an orderly state
- Fall or shock can adversely affect the safety functions. Such actuators must not be put into operation, even if they do not exhibit any damage

Mounting notes

- Ensure that the relevant national safety regulations are complied with

Standards and certificates

Conformity to EEC directives
- Electromagnetic compatibility EMC (immunity) 2004/108/EC
- Low-voltage directive 2006/95/EC

ISO 9001: 2010
Cert. 00739

ISO 14001: 2010
Cert. 38233

Only valid for
SQN70.xxxRxx
SQN71.xxxRxx

Disposal notes

The actuators contain electrical and electronic components and must not be disposed of together with household waste.
Local and currently valid legislation must be observed.

Mechanical design

Housing	- Made of impact-proof and heat-resistant plastic - The housing accommodates: – The reversible synchronous motor with gear train, which can be **disengaged** – The camshaft of the control section – The relays, depending on the type of actuator – The switches, connected to the terminals via the printed circuit board Color: SQN70.../SQN71...: Gear train housing dark-grey, cover light-grey SQN74.../SQN75...: Gear train housing black, cover black
Drive motor	- Reversible and locking-proof synchronous motor
Coupling	- Drive shaft can be manually disengaged from the gear train and motor (by pressing pin **K**) - Automatic reengagement 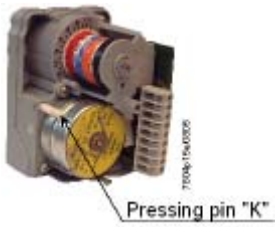
Adjustment of switching points	- By means of adjustable cams - Scales beside the cams indicate the angle of the switching point - Assignment of cams to the end and auxiliary switches is color-coded (see Connection diagrams) - Some of the cam feature fine adjustment; they can be adjusted with a standard screwdriver - The other cams can be adjusted manually or with the enclosed hook-spanner or a similar tool
Position indication	- Internally: Scale at the beginning of the camshaft on the gear train side
Electrical connections	- See Technical data
Gear train	- Maintenance-free
Drive shaft	- Made of black-finished steel - Ready fitted to the front of the gear train - Different versions available
Mounting and fixing	- Front of the gear train is used as the mounting surface - Actuator is secured via through-holes

Special versions for fitting potentiometer

Fitting a potentiometer	Certain types of actuators are supplied ready prepared for fitting a potentiometer. These actuators differ from the basic type **only in that the cover is higher**. They are prepared for housing the potentiometer. Accessories are not required. With these types of actuators, the third digit after the dot in the actuator's type reference is an «8». Example: SQN7x.xx**8**Axx → version for fitting a potentiometer, mounted higher cover AGA34 With the other types of actuators which are suited for fitting a potentiometer, the higher cover **AGA34** must be ordered (see Ordering). The required type of potentiometer is to be ordered as a separate item (see Ordering).

Type summary (other types of actuators available on request)

Diagram No.	Drive shaft [1] No.	Running time [2] for 90° s	Nominal torque [6] (max.) Nm	Holding torque Nm	AS [7] pcs.	Relay pcs.	Pot. [9] [10]	Length of housing [1] mm	Types for mains voltage/ mains frequency AC 230 V [4] +10% -15% 50...60 Hz	AC 115 V [3] +10% -15% 50...60 Hz	SQN7... replaces type
Actuators SQN70…/counterclockwise rotation [8]											
2	0	4	1.5	0.7	2	2	---	117	**SQN70.224A20**	---	---
4	0	4	1.5	0.7	2	3	---	117	**SQN70.244A20**	---	SQN30.121A2700
5	0	4	1,5	0,7	2	3	---	117	**SQN70.254A20**	---	---
6	0	4	1.5	0.7	2	---	[10]	80	**SQN70.264A20**	---	SQN30.101A2700
9	0	4	1.5	0.7	2	1	---	117	**SQN70.294A20**	---	SQN30.111A2700
2	0	6	1.5	0.7	2	2	---	117	**SQN70.324A20**	---	SQN30.151A2700
2	0	12	2.5	1.2	2	2	---	117	**SQN70.424A20**	---	---
5	0	12	2.5	1.2	2	3	---	117	**SQN70.454A20**	---	---
6	0	12	2.5	1.2	2	---	[10]	80	**SQN70.464A20**	---	---
6	3	12	2.5	1.2	2	---	[10]	80	**SQN70.464A23**	---	---
2	0	30	2.5	1.3	2	2	---	117	**SQN70.624A20**	---	---
6	0	30	2.5	1.3	2	---	[10]	80	**SQN70.664A20**	---	SQN30.401A2700
6	3	30	2.5	1.3	2	---	[10]	80	**SQN70.664A23**	---	SQN30.401A2730
Actuators SQN70.../counterclockwise rotation [8]/UL «Registered» for use in U.S. and Canada											
0	0	30	2.5	1.3	1	---	[10]	80	---	**SQN70.603R10**	---
0	9	30	2,5	1,3	1	---	[10]	80	---	**SQN70.603R19**	---
Actuators SQN71.../clockwise rotation [8]											
4	0	4	1.5	0.7	2	2	---	117	**SQN71.244A20**	---	SQN31.121A2700
6	0	4	1.5	0.7	2	---	[10]	80	**SQN71.264A20**	---	SQN31.101A2700
2	0	12	2.5	1.2	2	2	---	117	**SQN71.424A20**	---	---
4	0	12	2.5	1.2	2	2	---	117	**SQN71.444A20**	---	---
6	1	12	2.5	1.2	2	---	[10]	80	**SQN71.464A21**	---	---
2	3	30	2.5	1.3	2	2	---	117	**SQN71.624A23**	---	---
6	0	30	2.5	1.3	2	---	[10]	80	**SQN71.664A20**	**SQN71.664A10**	SQN31.401A2700
6	3	30	2,5	1,3	2	---	[9]	117	**SQN71.669A23**	**---**	---
9	0	30	2.5	1.3	2	1	---	117	**SQN71.694A20**	**---**	---
Actuators SQN71.../clockwise rotation [8]/UL «Registered» for use in U.S. and Canada											
0	9	12	2.5	1.2	1	---	[10]	80	---	**SQN71.403R19**	---
0	0	30	2.5	1.3	1	---	[10]	80	---	**SQN71.603R10**	---
0	9	30	2.5	1.3	1	---	[10]	80	---	**SQN71.603R19**	---
0	0	30	2.5	1.3	1	---	[9]	84	---	**SQN71.608R10** [5]	---
0	0	30	2.5	1.3	1	---	[9]	84	**SQN71.608R20** [5]	**---**	---

The UL-registered types of actuators

- also meet CE requirements
- are of the same basic design as the equivalent standard types

The only difference between the standard versions and the UL-registered versions is the use of other materials, especially plastics. In addition, the UL-registered versions are supplied complete with an adapter for use in the U.S. and Canada (see Dimensions).

Type summary / cont'd (other types of actuators available on request)

Diagram No.	Drive shaft [1] No.	Running time [2] for 90° s	Nominal torque [6] (max.) Nm	Holding torque Nm	AS [7] pcs.	Relay pcs.	Pot. [9] [10]	Length of housing [1] mm	Types for mains voltage/ mains frequency AC 230 V [4] +10% -15% 50...60 Hz	AC 115 V [3] +10% -15% 50...60 Hz	SQN7... replaces type
Actuators SQN74.../counterclockwise rotation [8]											
5	1	4	1,5	0,7	4	3	[9]	115	**SQN74.254A21**	---	---
9	1	4	1.5	0.7	2	1	[9]	115	**SQN74.294A21**	---	---
Actuators SQN75.../clockwise rotation [8]											
2	1	4	1.5	0.7	2	2	---	115	**SQN75.224A21**	---	---
2	6	4	1.5	0.7	4	2	---	115	**SQN75.224A26**	---	---
4	1	4	1.5	0.7	2	3	---	115	**SQN75.244A21**	---	---
4	6	4	1.5	0.7	2	3	---	115	**SQN75.244A26**	---	---
9	1	4	1.5	0.7	2	1	[9]	115	**SQN75.294A21**	---	---
9	1	4	1.5	0.7	4	1	[9]	115	**SQN75.294A26**	---	---
F	1	12	2.5	1.2	4	2	---	115	**SQN75.4F6A21**	---	---
2	1	12	2.5	1.2	2	2	---	115	**SQN75.424A21**	---	---
9	1	12	2.5	1.2	2	1	[9]	115	**SQN75.494A21**	---	---
2	6	23	2.5	1.2	4	2	---	115	**SQN75.524A26**	---	---
6	6	30	2.5	1.3	4	---	[9]	115	**SQN75.664A26**	---	---
9	1	30	2.5	1.3	2	1	[9]	115	**SQN75.694A21**	---	---

Legend

[1] See Dimensions
[2] At 60 Hz, running times are about 20% shorter
[3] AC 115 V +10%/-15% possible, but in the case of undervoltage, torque is reduced by about 20%
[4] AC 230 V +10%/-15% possible, but in the case of undervoltage, torque is reduced by about 20%
[5] On request
[6] Under nominal conditions; under extreme conditions (e.g. +60 °C, AC 230 V –15%) approx. –25%
[7] Auxiliary switches (in addition to the 2 end switches)
[8] When facing the drive shaft and when control voltage is supplied to end switch I
[9] Suited for direct fitting of potentiometer (see Fitting a potentiometer)
[10] Suited for fitting potentiometer. Cover AGA34 to be ordered as a separate item

Ordering

Actuator — see Type reference

Potentiometer ASZ… — see Data Sheet N7921
see Mounting Instruction M7921

Mounting kit — **AGA70.3**
- For mounting the SQN70.../SQN71... in place of the SQN3...
- Fitted to the SQN70.../SQN71... with a self-tapping screw (included as standard)

Cover — **AGA34**
- For SQN70…/SQN71… backfitting with potentiometer ASZxx.3x

Technical data

General actuator data

Actuator	Mains voltage	AC 230 V –15% +10% AC 115 V –15% +10%
	Mains frequency	50...60 Hz ±6%
	Drive motor	Synchronous motor
	Power consumption	6 VA
	Angular adjustment	Max. 160°, scale range 0...130°
	Mounting position	Optional
	Degree of protection	
	- All types	IP40 to DIN 40050, provided adequate cable entries and fixing screws are used
	- SQN74.../SQN75...	IP20 to DIN 40050, provided lateral knockout hole for cable is used
	Safety class	
	- SQN70.../SQN71...	II to DIN EN 60730
	- SQN74.../SQN75...	I to DIN EN 60730
	Cable entry	
	- SQN70.../SQN71...	Insertable threaded cable gland holder for 2 x Pg9, no locknut required
	- SQN74.../SQN75...	Openings for locknut for fixing cable glands Type of locknut 1 x Pg9 — M Pg9 DIN 46320 MS 1 x Pg11 — M Pg11 DIN 46320 MS Additional lateral knockout hole for loose introduction of 2 cables with a maximum dia. of 6 mm, cable strain relief to be provided by the user (also see Degree of protection) Pg glands and locknuts are not part of the delivery
	Cable connections	Screw terminals for min. 0.5 mm² and max. 2.5 mm² cross-sectional area
	Ferrules	Matching the dia. of the stranded wire
	Direction of rotation	See Type summary
	Nominal and holding torque	See Type summary
	Running times	See Type summary
	Load changes with continuous rated load	Typically 500,000
	Weight (average)	Approx. 500 g
	On time	60% max. 3 min. continuous operation
	Backlash between drive motor and drive shaft	
	- As supplied	≤1.2° ±0.3°
	- After 250,000 cycles	≤1.5° ±0.3°

End and auxiliary switches

Number of end switches	2
Number of auxiliary switches	See Type summary
Actuation	Via camshaft, color-coded cams (see Connection diagrams) Switches with fine adjustment - SQN70.../SQN71... : II and III - SQN74.../SQN75... : III and IV
Breaking voltage	AC 24...250 V
Adjustment of cams	
- Without fine adjustment	1°
- With fine adjustment	Infinitely
Max. perm. amperage at cos φ = 0.9: (values in parentheses: short-time peaks for max. 0.5 s)	
• Connection diagram ⓪	
– Terminals 1, 2, 3, 4	0.5 A
– Terminals 5, 6, 7	1 A (7 A)
• Connection diagram ①	
– Terminals 1, 2, 6, 7	0.5 A
– Terminals 3, 4	1 A (7 A)
• Connection diagram ②	
– Terminals 1, 2, 3, 8	0.5 A
– Terminal 4, 5	2 A (14 A)
– Terminal 6, 7	1 A (7 A)
• Connection diagram ③	
– Terminals 1, 2, 3, 8, 11	0.5 A
– Terminals 4, 5, 7, 10	1 A (7 A)
• Connection diagram ④	
– Terminals 1, 3, 8	0.5 A
– Terminal 4, 5	3 A (14 A)
– Terminal 6, 7	1 A (7 A)
• Connection diagram ⑤	
– Terminals 1, 2, 3, 8	0.5 A
– Terminal 4, 5	2 A (14 A)
– Terminal 6, 7	1 A (7 A)
• Connection diagram ⑥	
– Terminals 1, 2, 3, 4, 5	0.5 A
– Terminal 6, 7, 8	1 A (7 A)
• Connection diagram ⑨	
– Terminals 1, 2, 3, 4, 5, 8	0.5 A
– Terminal 6, 7	1 A (7 A)
• Connection diagram Ⓕ	
– Terminals 2...7	0.5 A
– Terminals 1, 8, 9	1 A (7 A)
• Connection diagram Ⓚ	
– Terminals 1, 2	0.5 A
– Terminals 3, 4, 5, 6, 7, 8	1 A (7 A)

Environmental conditions

Storage	DIN EN 60721-3-1
Climatic conditions	Class 1K3
Mechanical conditions	Class 1M2
Temperature range	-20...+60 °C
Humidity	<95% r.h.
Transport	DIN EN 60721-3-2
Climatic conditions	Class 2K2
Mechanical conditions	Class 2M2
Temperature range	-50...+60 °C
Humidity	<95% r.h.
Operation	DIN EN 60721-3-3
Climatic conditions	Class 3K5
Mechanical conditions	Class 3M2
Temperature range	-20...+60 °C
Humidity	<95% r.h.

Caution!
Condensation, formation of ice and ingress of water are not permitted!

Function

A synchronous motor drives the camshaft via a gear train. The camshaft actuates the end and auxiliary switches. Using the associated cam, the switching position of each end and auxiliary switch can be adjusted within the working range. Some of the actuator versions are equipped with electronic modules, which perform auxiliary functions in connection with the end and auxiliary switches, or with external devices, such as controllers (see Connection diagrams). The functions and technical data of both lines of actuators SQN70.../SQN71... and SQN74.../SQN75... are nearly identical.

Replacement of SQN30.../SQN31...

The *Type summary* contains actuators type **SQN3...,** which can be replaced by SQN70.../SQN71... with the help of a mounting kit (see Ordering).

The **SQN30...** and **SQN31...** contained in the *Type summary*

- See SQN7... AC 230 V versions
- are versions **with no** facility for fitting a potentiometer (see Data Sheet N7808)

Mechanical adaptations are not normally required.
To be noted are the different terminal assignments used with the 2 lines of actuators.

Connection diagrams

Note!
The following connection diagrams show the start position as supplied:
- End switch position II CLOSE
- Dead

No. ② → LGB22.../LGB32.../LME22.../LME23.../LMG22...

2-stage or modulating operation → prepurging at nominal load position (NL)

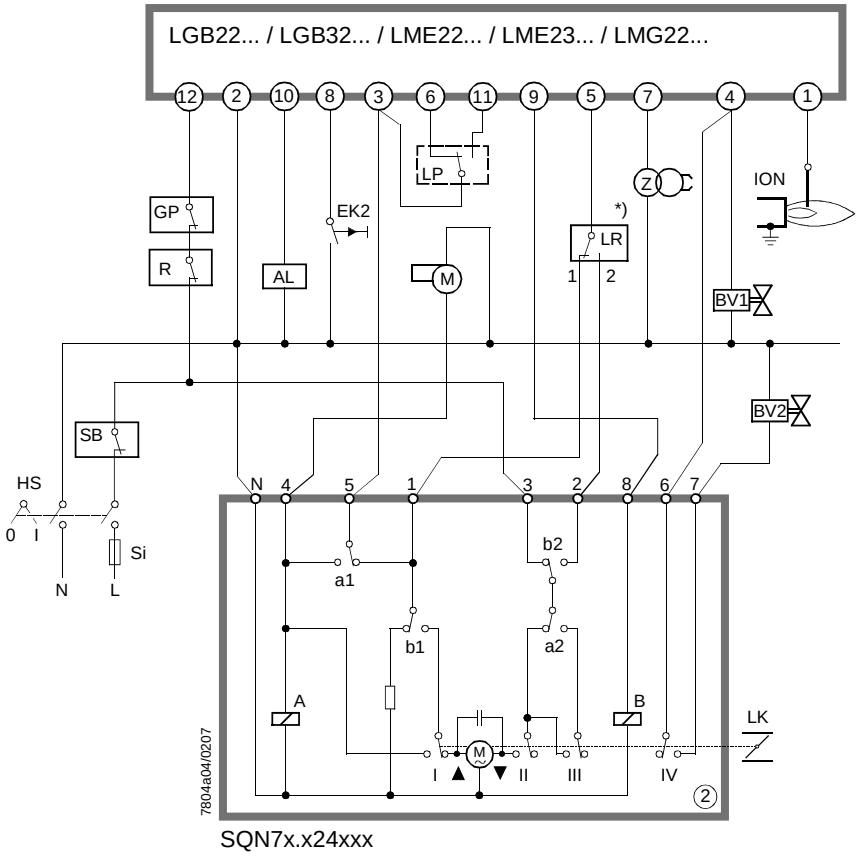

*) Thermostat or similar unit with changeover contact (2-wire control), or 3-position controller for ON/OFF positioning pulses and neutral position

I	Red
II	Blue
III	Orange
IV	Black

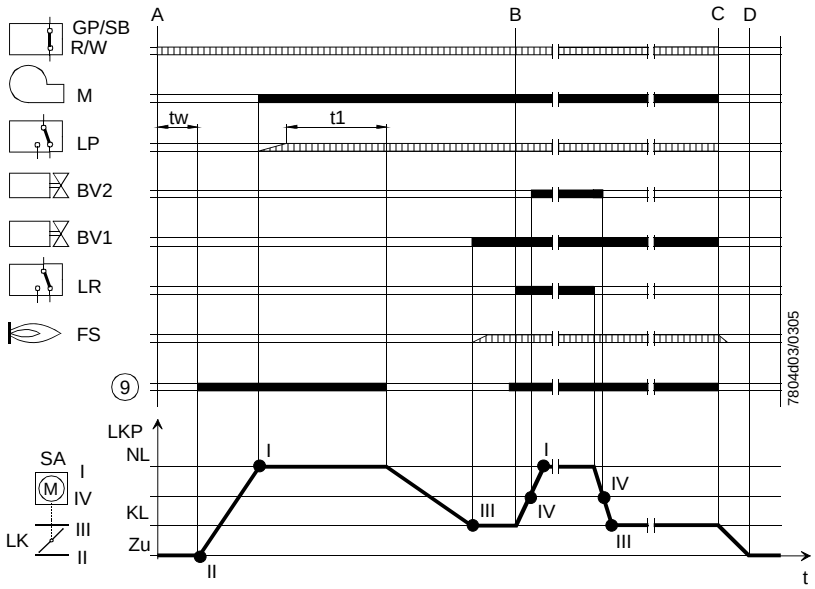

Sequence diagram shows 2-stage operation

No. ④ → LOA24.../LOA25.../LOA26.../LOA28.../LOA36.../LMO24.../LMO44...

2-stage operation → prepurging at low-fire position (KL)

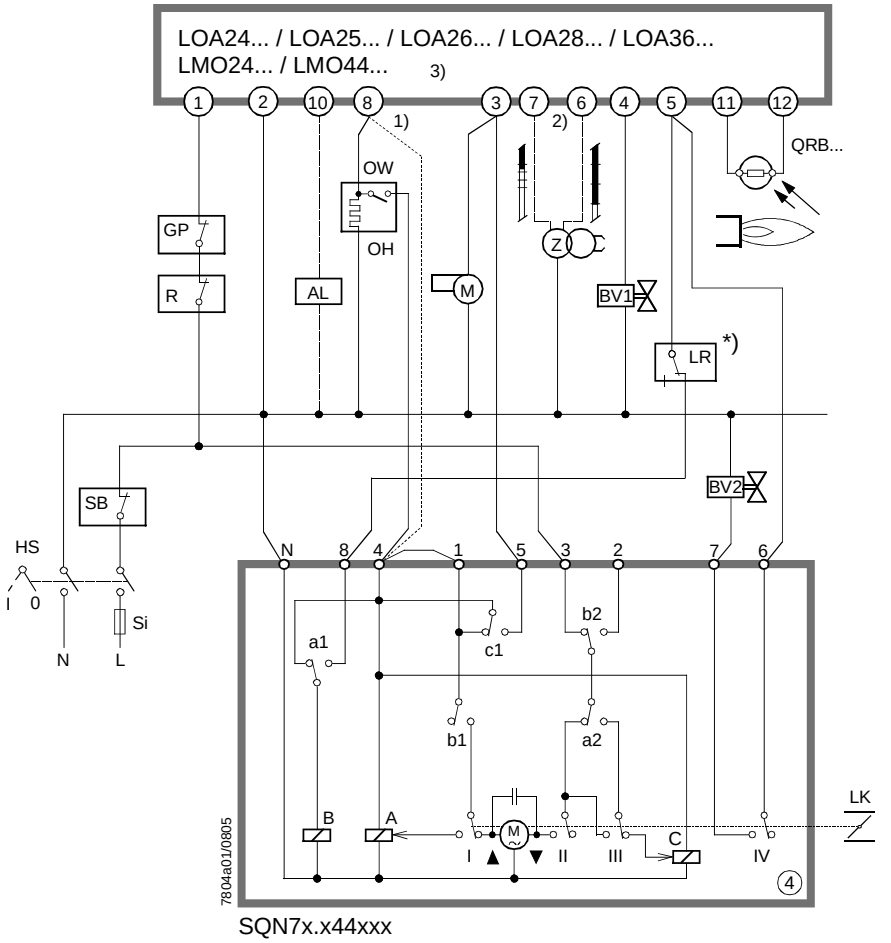

1) Without oil preheater
2) See Data Sheet N7118
3) LOA.../LMO... with oil preheater:
If oil preheater's readiness contact (OW) opens during operation, a new start will be made

*) Thermostat or similar unit with NO contact (1-wire control)

I Red
II Blue
III Orange
IV Black

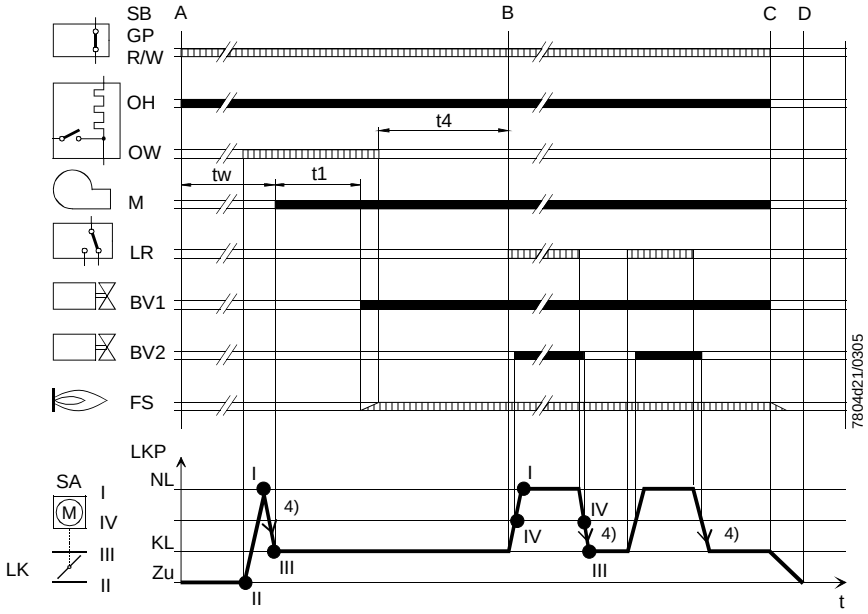

4) Required position is approached from only one side to eliminate switching differential (compensation of backlash)

No. ④ → LGB21.../LME21.../LMG21...

2-stage operation → prepurging at low-fire position (KL)

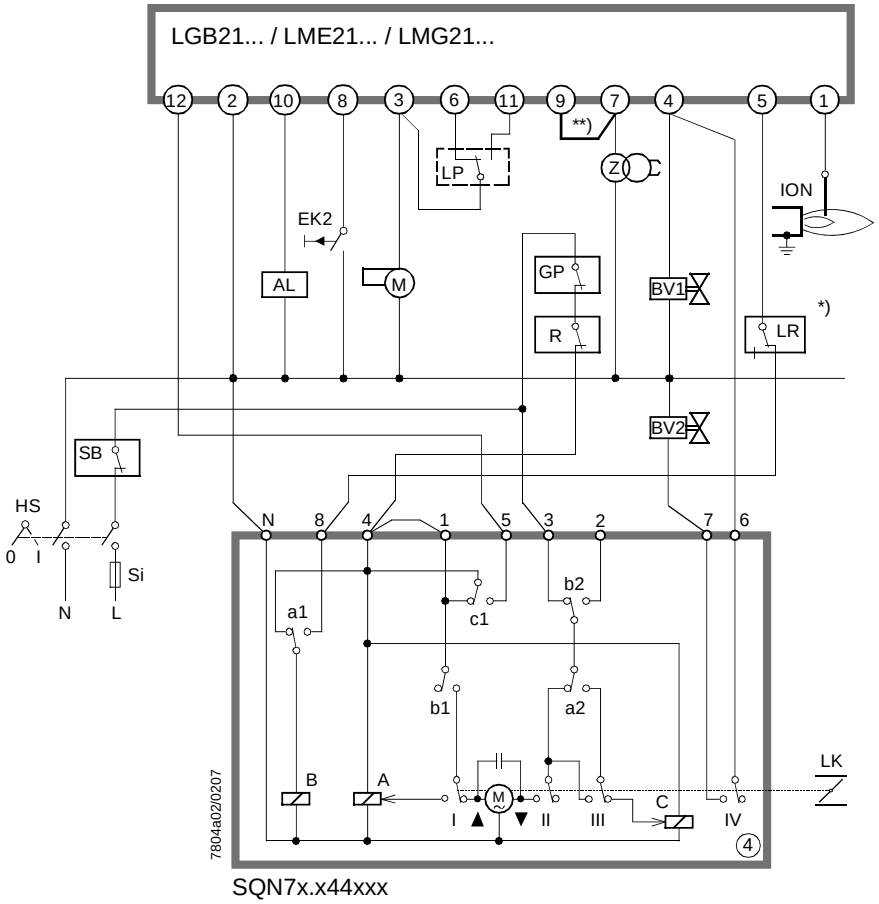

**) Only required with LGB21...

*) Thermostat or similar unit with NO contact (1-wire control)

I Red
II Blue
III Orange
IV Black

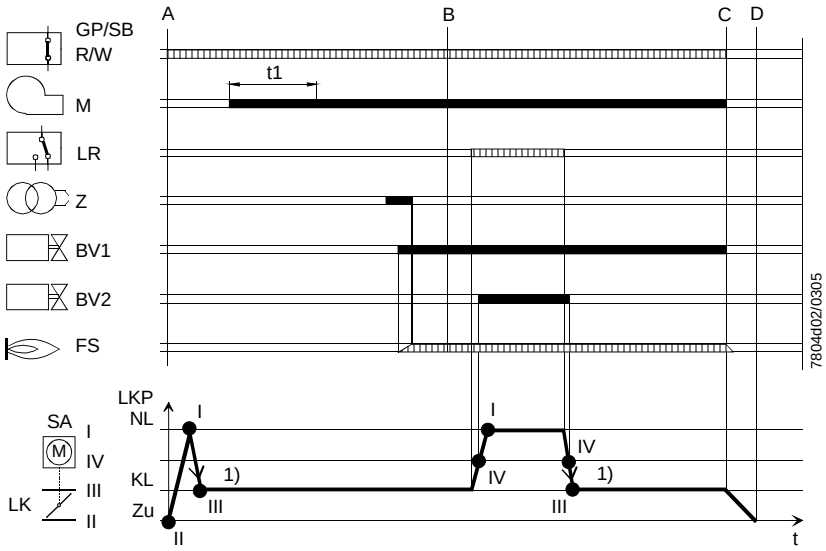

1) Required position is approached from only one side to eliminate switching differential (compensation of backlash)

No. ⑤ → LME22.../LME23.../LGB22.../LGB32.../LMG22...

2-stage operation → prepurging at nominal load position (NL)

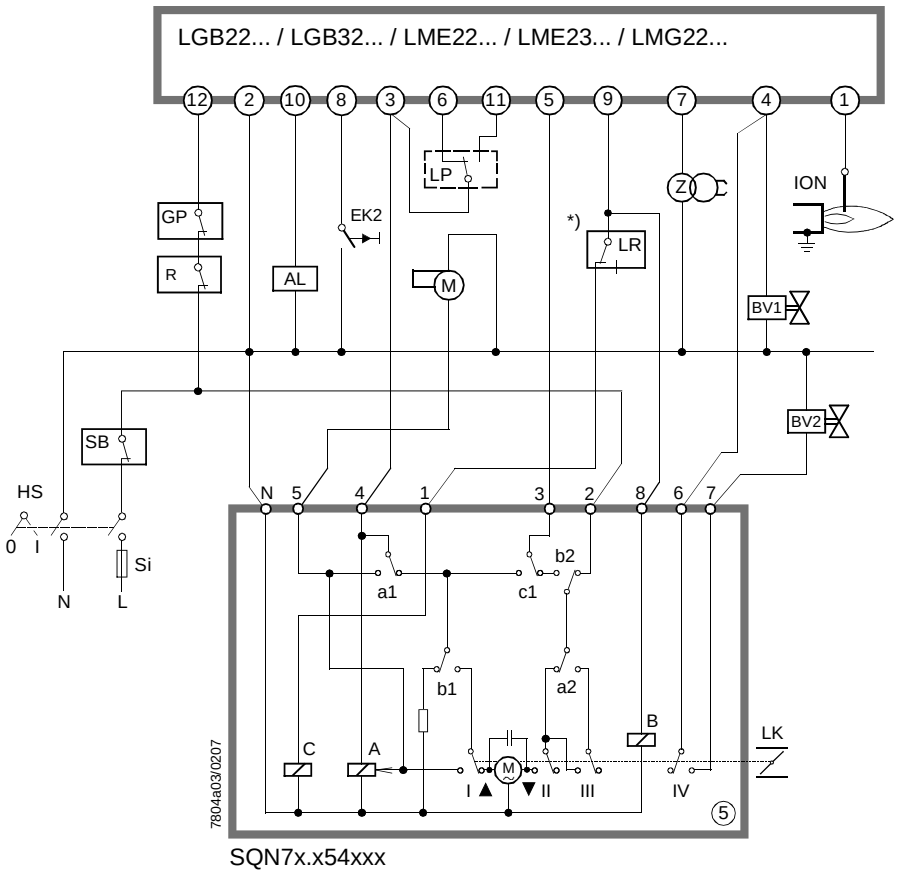

*) Thermostat or similar unit with NO contact (1-wire control)

I Red
II Blue
III Orange
IV Black

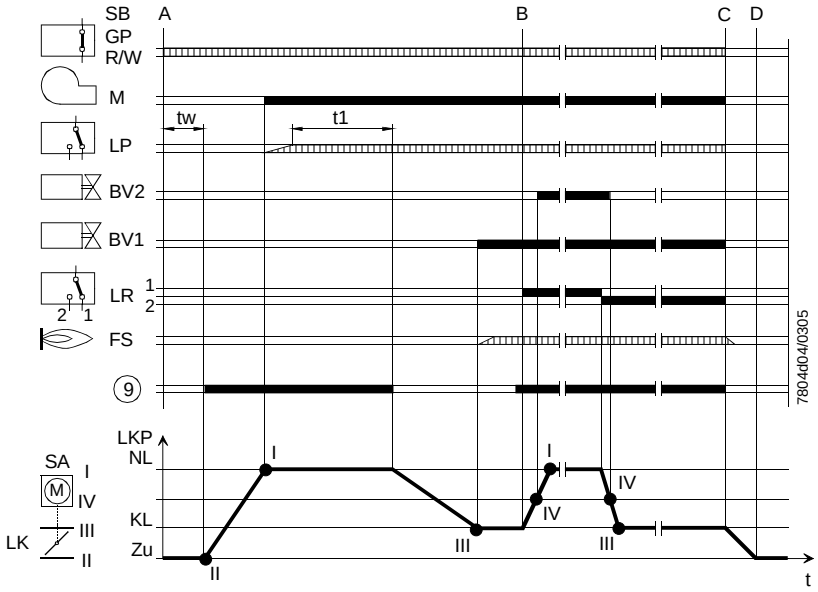

No. ⑥ → LFL.../LGK16.../LAL.../LOK16...

2-stage or modulating operation → prepurging at nominal load position (NL)

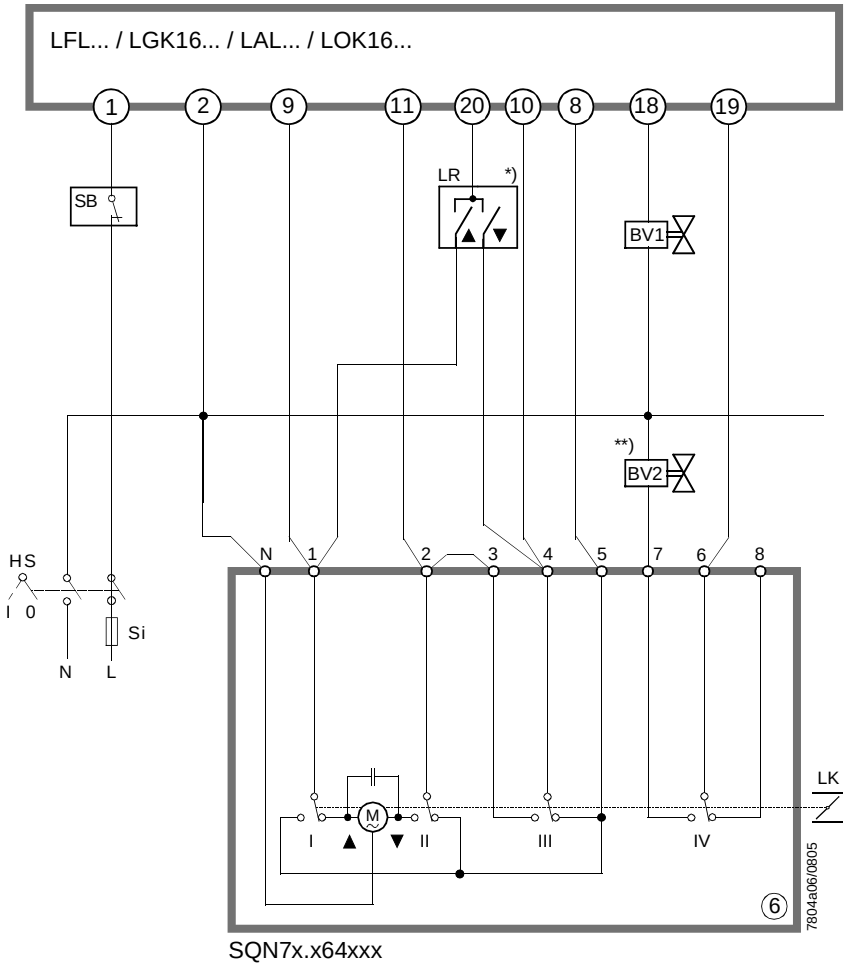

*) Thermostat or similar unit with changeover contact or 3-position controller for ON/OFF positioning pulses and neutral position

**) In the case of modulating operation, fuel valve (BV2) is replaced by a gas control valve (RV)

I Red
II Blue
III Orange
IV Black

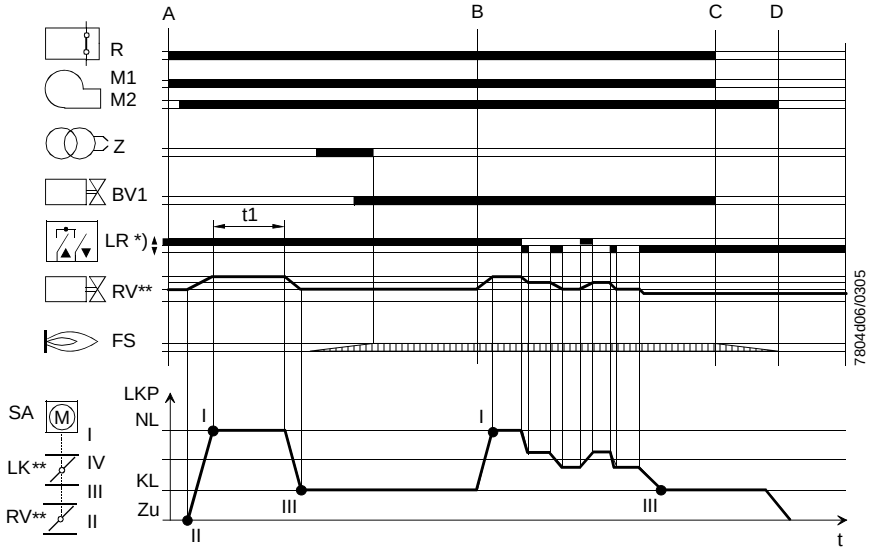

Program sequence diagram shows modulating operation.

No. ⑨ → LOA.../LMO24.../LMO44...

2-stage operation → prepurging at low-fire position (KL)

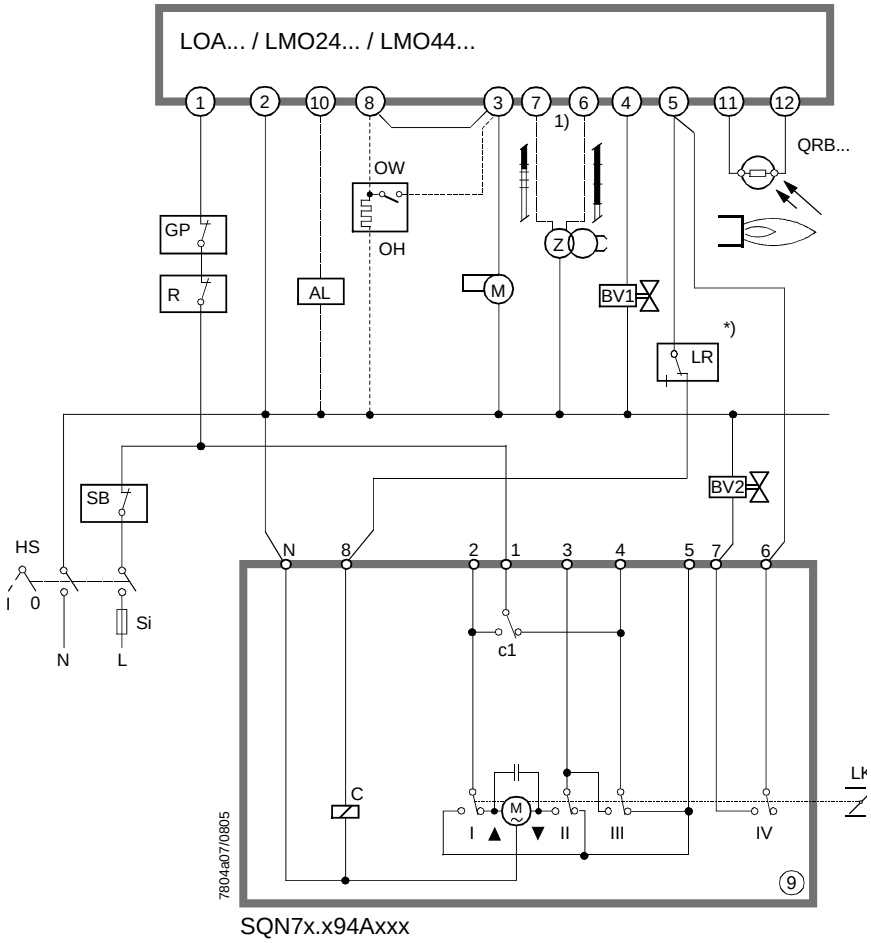

1) See Data Sheets N7118 and N7130

*) Thermostat or similar unit with NO contact (1-wire control)

I Red
II Blue
III Orange
IV Black

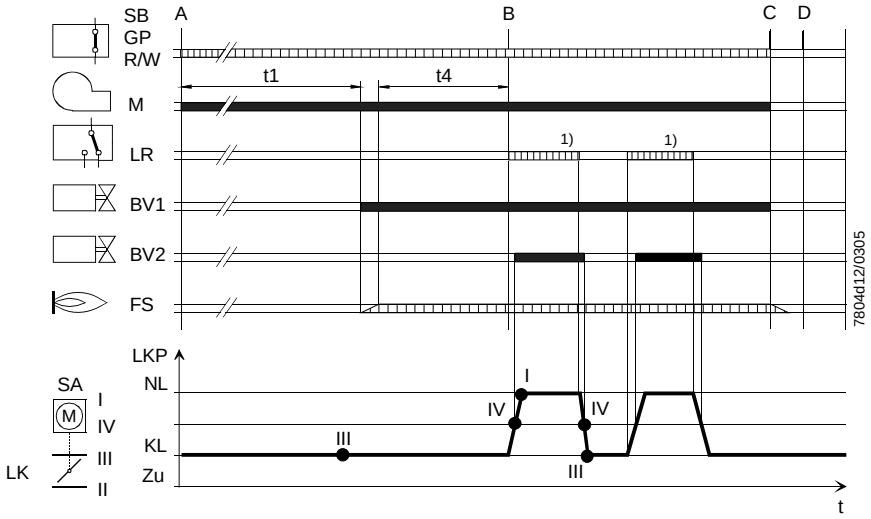

Program sequence without oil preheater

In the case of burner OFF, the air damper will stop at low-fire position (KL).
To be noted are the heat losses that normally occur during off times.

No. ⑨ → LFL.../LGK16.../LAL.../LOK16...

2-stage operation → prepurging at nominal load position (NL)

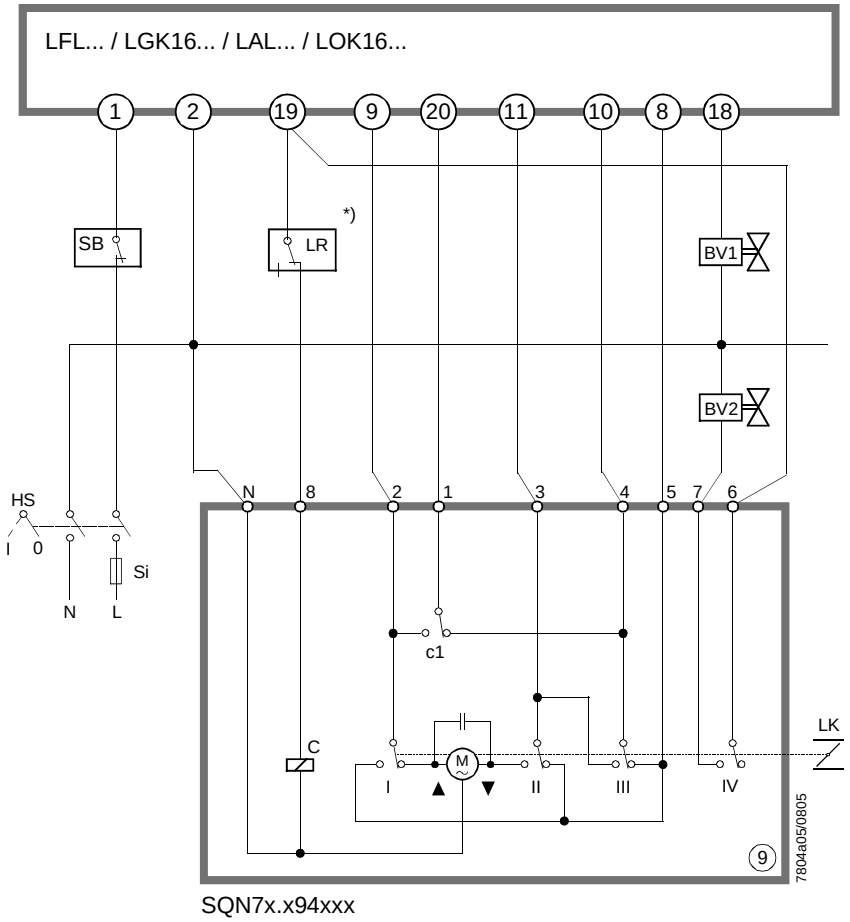

*) Thermostat or similar unit with NO contact (1-wire control)

I Red
II Blue
III Orange
IV Black

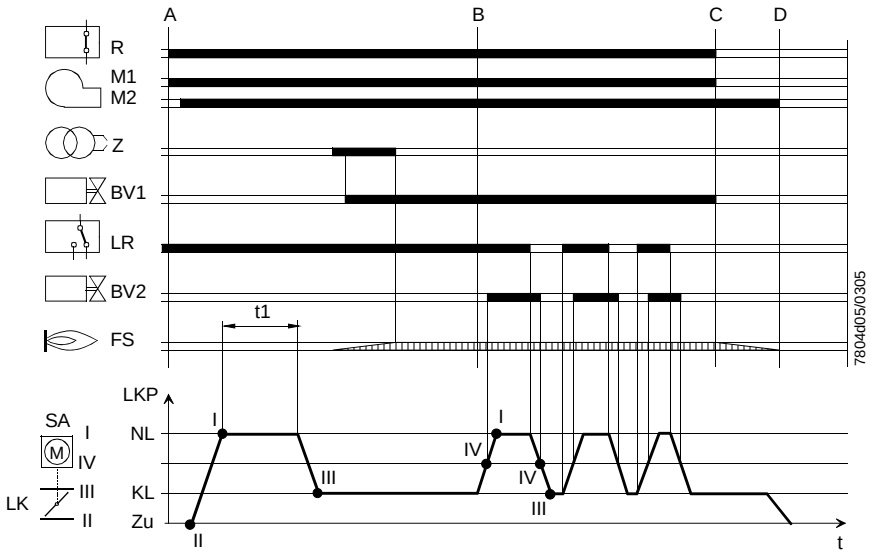

No. Ⓕ → LAL.../LFL...

3-stage operation → prepurging at nominal load position (ST.3)

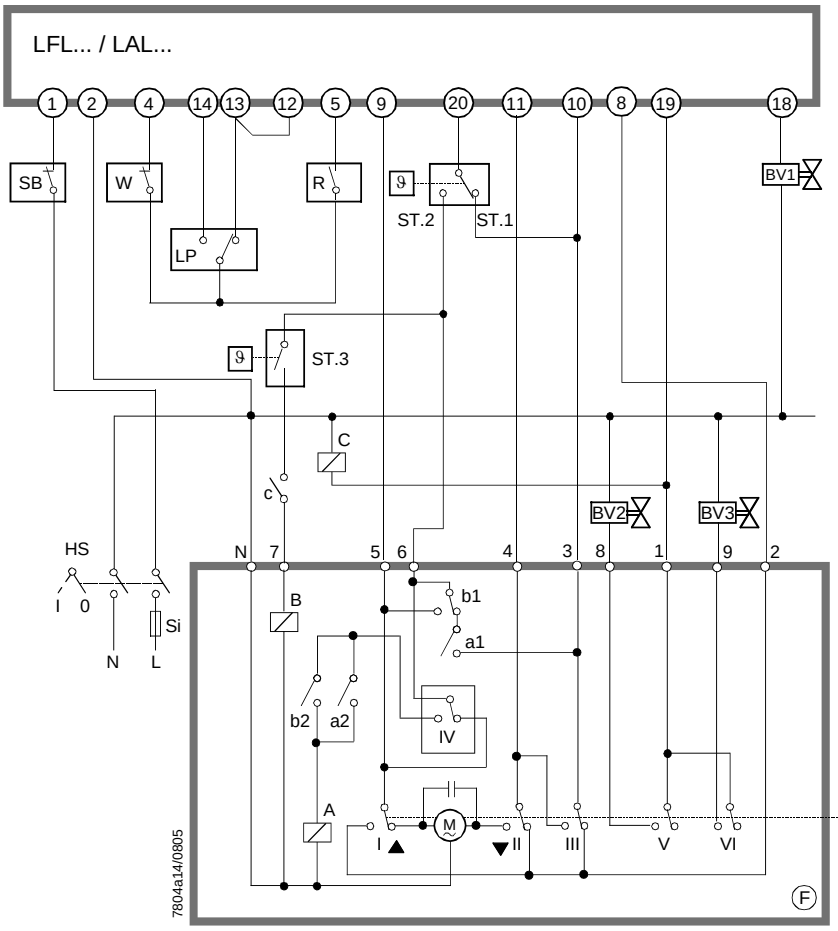

SQN75.2F6xxx

ST.1...3	Stage 1...3
C	External auxiliary relay
I	Red
II	Blue
III	Orange
IV	Yellow
V	Black
VI	Green

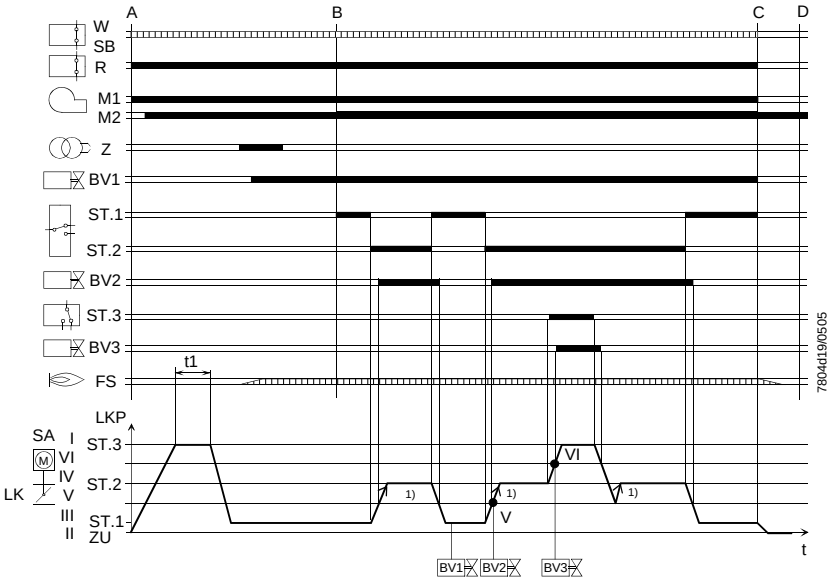

1) Required position is approached from only one side to eliminate switching differential (compensation of backlash)

No. ⓪ → Universal use

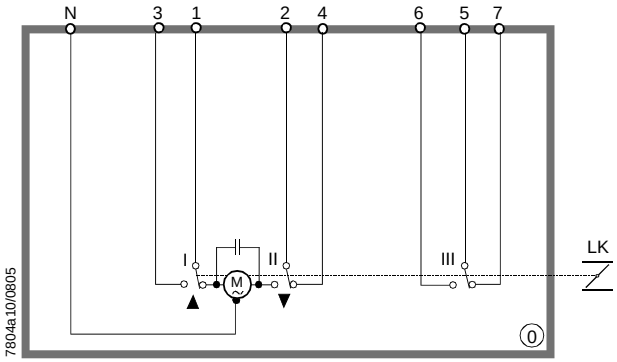

SQN7x.x03xxx

I Red
II Blue
III Orange

No. Ⓚ → Universal use

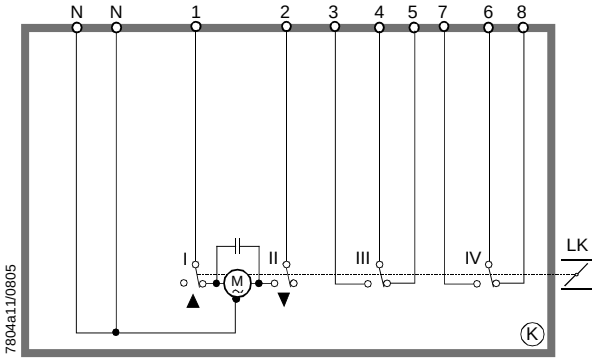

SQN7x.xK4xxx

I Red
II Blue
III Orange
IV Black

No. ① → TMG740/TMO720

2-stage operation → prepurging at nominal load position «NL»

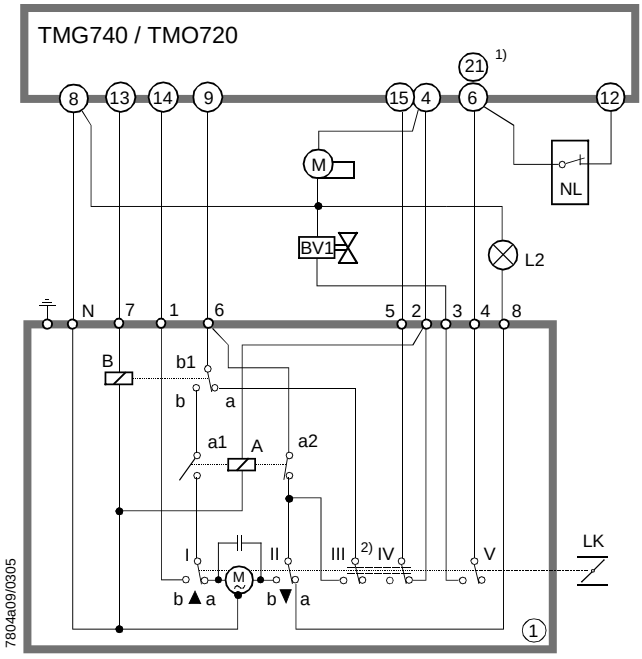

SQN74.x15xxx
SQN75.x15xxx

1) TMO720 terminal no. 6
TMG740 terminal no. 21

2) Cams of auxiliary switches III and IV rigidly connected

I Red
II Blue
III Orange
IV Orange
V Black

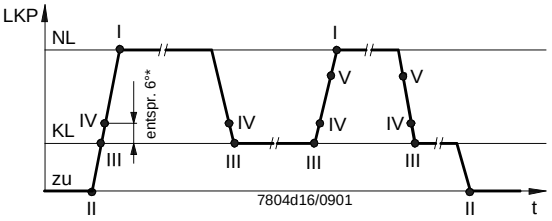

- **TMG.../TMO... are burner controls of other manufacture.**
  The user must check with the supplier of the TMG.../TMO... the proposed combination with the actuator from a safety point of view and with regard to the type of burner control used.
  The user will assume full responsibility for this application.

- **Connection diagram no. ① corresponds to connection diagram no. ③ of the SQN3...**

Legend

No. ②	Number of internal diagram. Appears at the second position after the dot in the type reference
I/II	End switches
III/IV/V	Auxiliary switches
AL	Remote indication of lockout (alarm)
BV1	Fuel valve stage 1
BV2	Fuel valve stage 2
BV3	Fuel valve stage 3
EK2	External remote reset button
ION	Ionization probe
FS	Flame signal
GL	Gas / air ratio controller
GP	Gas pressure switch
HS	Main switch
KL	Low-fire
L	Live conductor
LK	Air damper
LKP	Air damper position
LP	Air pressure switch
LR	Load controller
M	Burner or fan motor
Ⓜ	Actuator's synchronous motor
M1	Without postpurge
M2	With postpurge
N	Neutral conductor
NL	Nominal load
OH	Oil preheater
OW	Oil preheater's readiness contact
QRB...	Photoresistive flame detector
R	Temperature or pressure controller
	Relay
RV	Control valve
SA	Actuator
Si	External primary fuse, as specified in the Data Sheet of the relevant burner control
SB	Safety limiter
ST...	Stage
t... / T...	Program times (see Data Sheet of the relevant burner control)
TSA	Safety time
R	Resistance
Z	Ignition transformer
CLOSE	Damper fully closed
▲	Direction of rotation OPEN
▼	Direction of rotation CLOSE

Program sequence diagrams

A	Burner ON
A – B	Startup of burner
B – C	Burner operation / load control operation (modulating or 2-stage)
C	Burner OFF
C – D	Overrun time
D	End of program, burner control ready for new start

Dimensions

Dimensions in mm

SQN70.../SQN71...

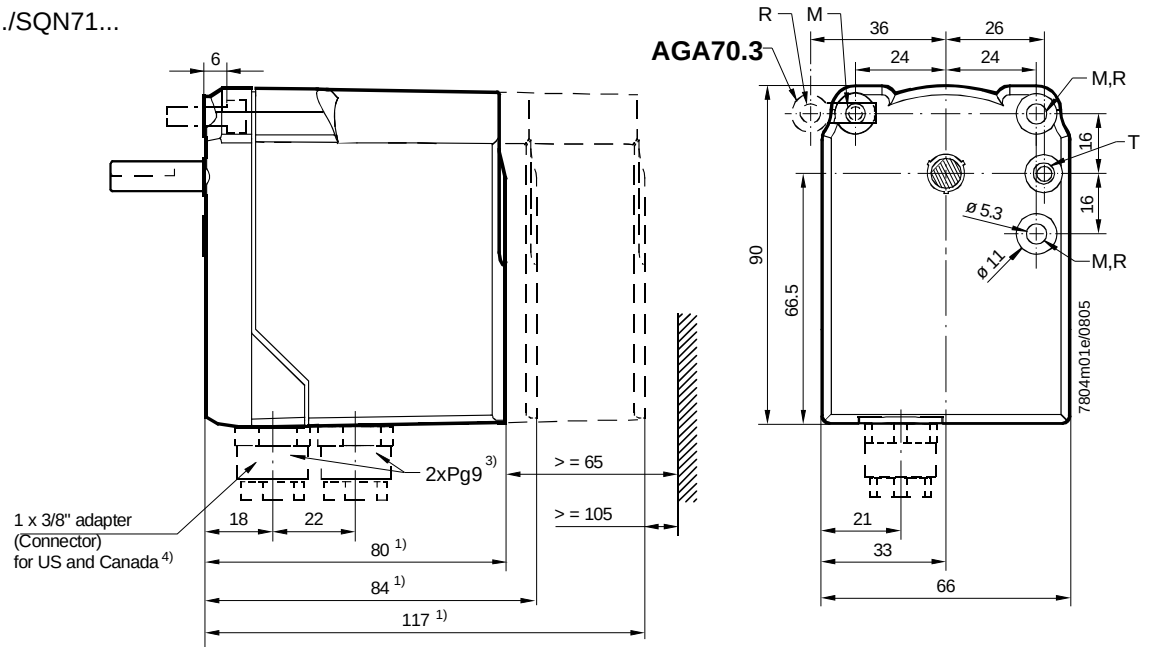

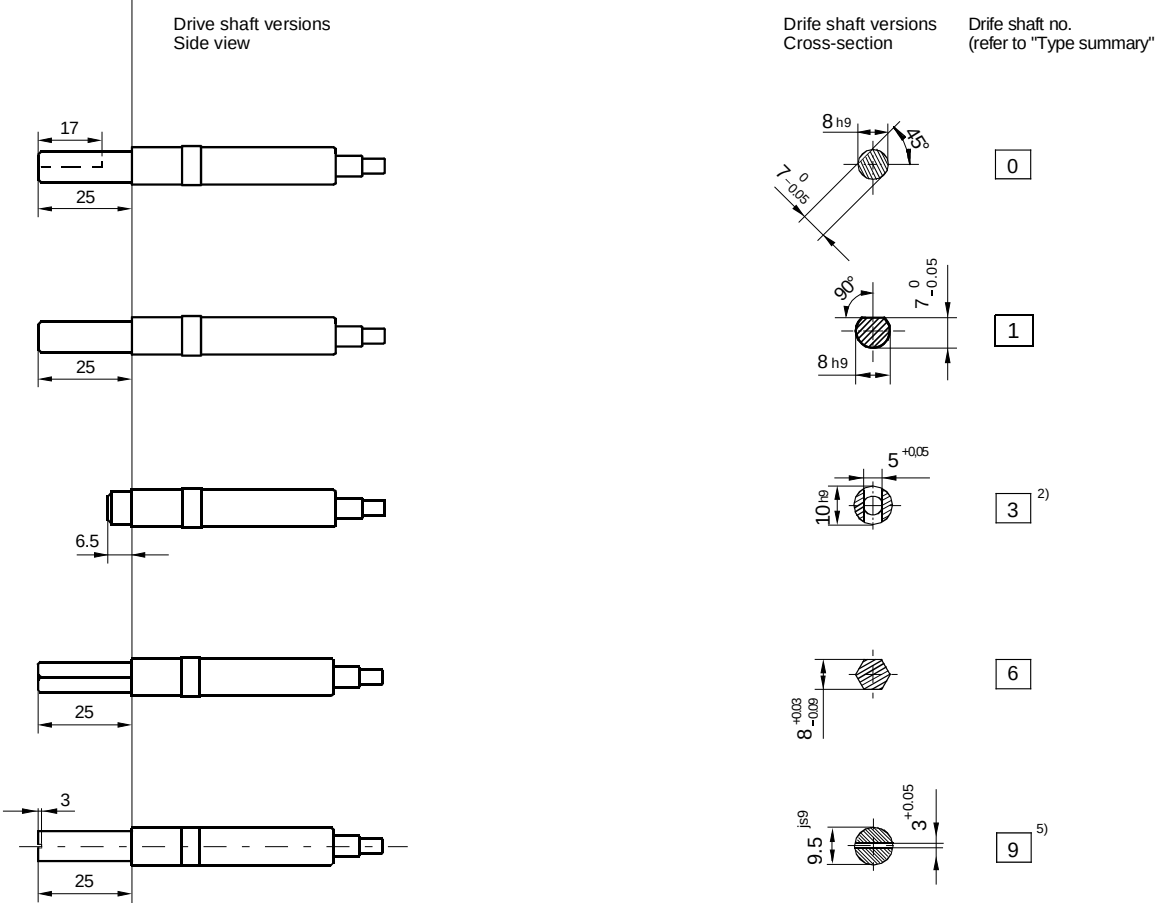

All drive shafts shown in end switch position II CLOSE as supplied.

1) Housing length depending on the type of actuator (see Type summary)
2) Center groove: 6.3 mm deep
   Hole 5.1 mm dia.: 16.5 mm deep
   (incl. center groove depth)
3) Not included in supply
4) Supplied with actuators type SQN7x.xxxRxx
5) Groove does not serve for transmission of force

R Fixing positions matched to the SQN3...
(for 1-to-1 replacement by SQN70.../SQN71...)
requiring AGA70.3
M Through-hole 5.3 mm dia.
T Knockout hole 5.3 mm dia.

Dimensions in mm

SQN74.../SQN75...

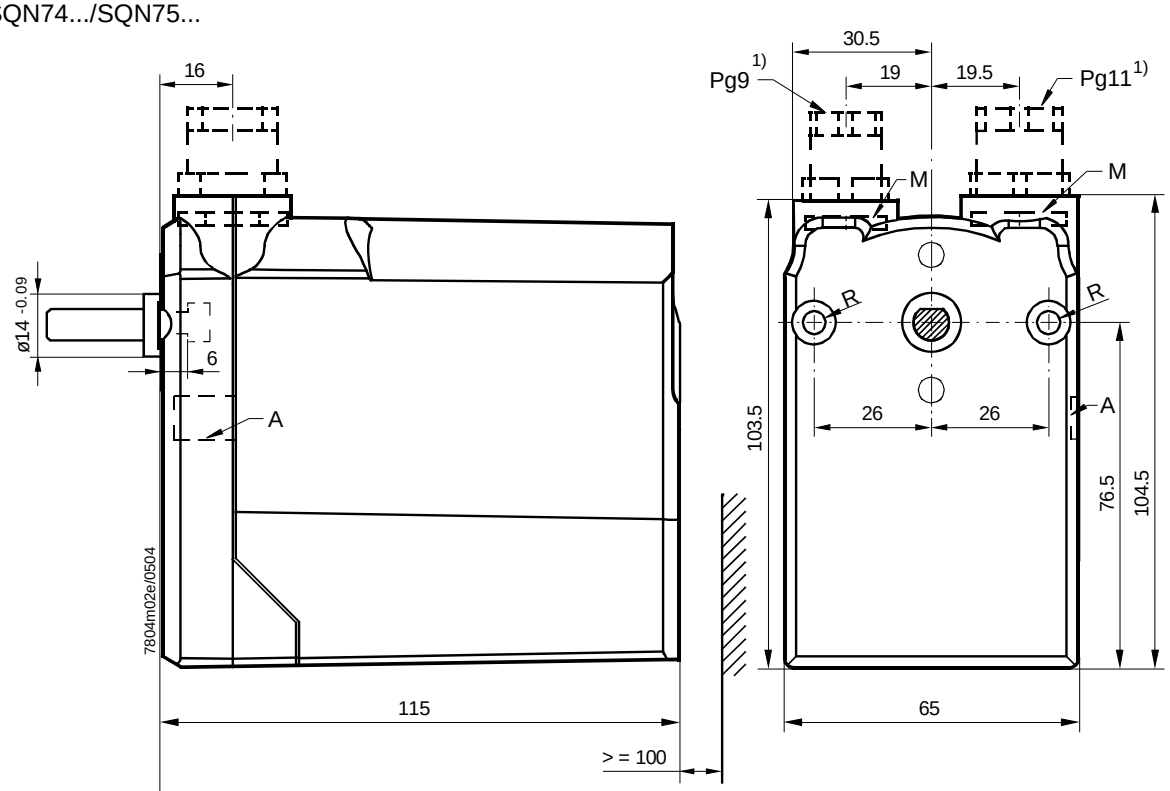

Drive shaft version
Side view

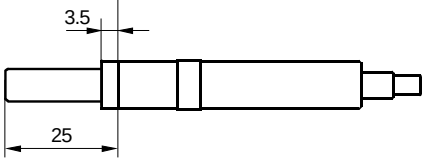

Drive shaft versions
Cross-section

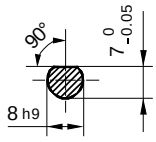

Drive shaft no.
(refer to "Type summary")

1

Drive shafts shown in CLOSE position (end switch II)

A	Knockout hole for loose cable entry
R	Through-hole 5.3 mm dia. Fixing positions matched to Conectron LKS 160 and Berger STA
M	Pg nuts (not included in supply; for type reference, see Technical data)

1) Not included in supply